"APPROVED FOR RELEASE: 08/25/2000 CIA-RDP86-00513R000516320015-8

Experience Gained in the Organization and Recording of Settling and of Horizontal Shift in the Structures of the Kakhovka Water Power Development SOV/154-58-4-13/18

exclusively done by a second grade standard. The procedures used are described in detail. Recording observations of the horizontal shift of the spillway dam were done by range line measurements, a somewhat modified method being used. The design of the bench marks in the range line of the spillway dam is due to M.S. Murav'yev. Small alterations of this design are suggested. The method of observation employed in this work is simple and it guarantees the required accuracy. There are 8 figures and 2 tables.

ASSOCIATION: Ukrainskoye otdeleniye Gidroenergoproyekta (Ukrainian Branch of the Gidroenergoproyekt)

Card 2/2

APPROVED FOR RELEASE: 08/25/2000 CIA-RDP86-00513R000516320015-8"

"APPROVED FOR RELEASE: 08/25/2000 CIA-RDP86-00513R000516320015-8

18.3200

77608
SOV/133-60-2-8/25

AUTHORS: Volovik, F. L., Gorshtein, P. I., Zelenskiy, V. D., Poyarkov, A. M.

TITLE: Concerning Application of Forsterite Checkers

PERIODICAL: Stal', 1960, Nr 2, pp 125-127 (USSR)

ABSTRACT: The purpose of this investigation was to establish the reasons for the impaired performance of the furnace after replacement of dynas brick by forsterite brick in the 8-12 top checker rows. It was found that decreasing heat conductivity of forsterite brick has little influence on the thermal performance of the checkers. The main cause of poorer performance is the irregularity of smoke and air distribution in the horizontal cross section. The distribution of temperature in the horizontal cross section was determined on a fire model and on the working checkers of a 185-ton furnace. The checkers have a cubic shape with rib size of 6 m, shown in Fig. 2.

Card 1/6

APPROVED FOR RELEASE: 08/25/2000 CIA-RDP86-00513R000516320015-8"

"APPROVED FOR RELEASE: 08/25/2000 CIA-RDP86-00513R000516320015-8

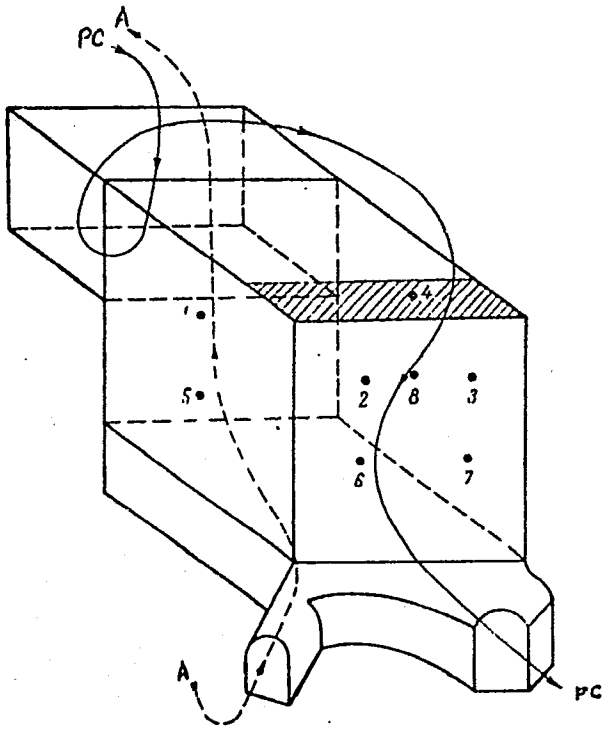

77608
SOV/133-60-2-8/25

Fig. 2. Schematic diagram of thermocouple location (1-8) and of movement of products of combustion (PC) and air (A) through the right furnace checkers.

Card 2/6

APPROVED FOR RELEASE: 08/25/2000 CIA-RDP86-00513R000516320015-8"

"APPROVED FOR RELEASE: 08/25/2000 CIA-RDP86-00513R000516320015-8

Concerning Application of Forsterite Checkers

77608
SOV/133-60-2-8/25

The temperature was measured with a 2.5 m long thermocouple in two horizontal planes (Fig. 2). The measurement results shown in Fig. 3 lead to the following conclusions: (1) Combustion products outgoing from vertical ducts make turn in the slag pocket and move mainly to the front wall of the regenerator (Fig. 2). (2) Most of the combustion products pass through the checker area adjacent to the front wall, and most of the air through the checker area adjacent to the bridge wall. (3) The distribution of temperature showed that the gas and air flows do not coincide, which leads to poorer heating of the air. (4) The uniform distribution of the smoke and air by means of temporary and partial closing of the slag pocket allows a decrease in fuel consumption and an increase in furnace productivity. Credit is given to Orman, V. Ya., for his participation. There are 5 figures; and 3 Soviet references.

Card 3/6

APPROVED FOR RELEASE: 08/25/2000 CIA-RDP86-00513R000516320015-8"

"APPROVED FOR RELEASE: 08/25/2000 CIA-RDP86-00513R000516320015-8

Concerning Application of
Forsterite Checkers

77608
SOV/133-60-2-8/25

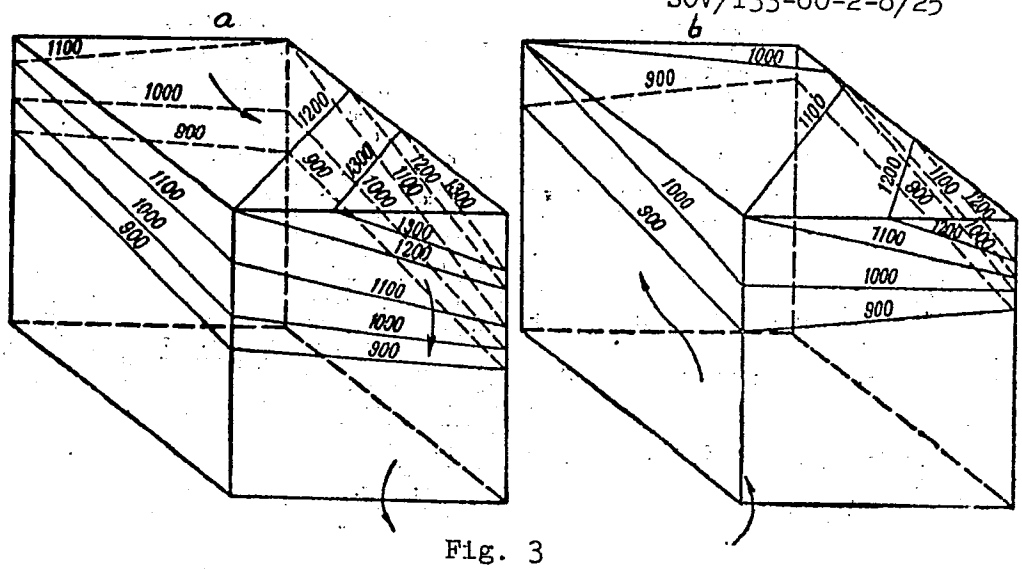

Fig. 3

Card 4/6

APPROVED FOR RELEASE: 08/25/2000 CIA-RDP86-00513R000516320015-8"

"APPROVED FOR RELEASE: 08/25/2000 CIA-RDP86-00513R000516320015-8

Concerning Application of
Forsterite Checkers

77608
SOV/133-60-2-8/25

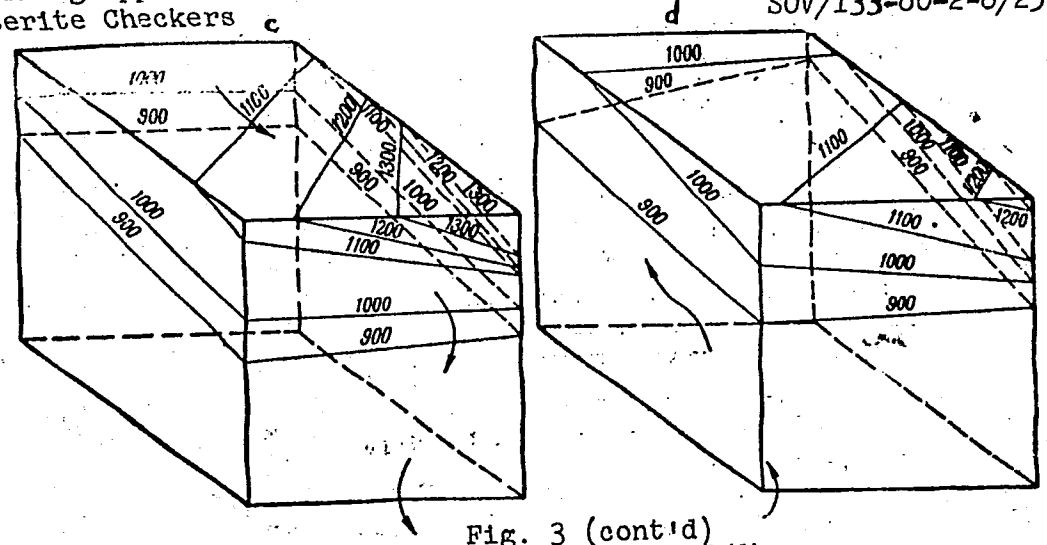

Card 5/6

Fig. 3 (cont'd)
(Caption Card 6/6)

APPROVED FOR RELEASE: 08/25/2000 CIA-RDP86-00513R000516320015-8"

"APPROVED FOR RELEASE: 08/25/2000 CIA-RDP86-00513R000516320015-8

Fig. 3. Temperature distribution (in °C) in right checkers of open-hearth furnaces. (a) Toward end of passage of combustion products (in charging); (b) same, toward end of air passage period; (c) toward end of combustion product passage in smelting; (d) same, toward end of air passage.

APPROVED FOR RELEASE: 08/25/2000 CIA-RDP86-00513R000516320015-8"

"APPROVED FOR RELEASE: 08/25/2000 CIA-RDP86-00513R000516320015-8

USSR / General and Specialized Zoology. Insects P
Forest Pests.

Abs Jour : Ref Zhur - Biol., No 17, 1958, No 78324

Authors : Gorshun, N. S. ; Kleiner, B. D.
Inst : Not given
Title : Pests and Diseases of the Seeds of the Basic Trees in Central Asia and Southern Kazakhstan

Orig Pub : Sb. rabot po lesn. kh-vu. M.-L., Goslesbumizdat, 1957, 73-75

Abstract : In 1952-54, the pests and diseases of the fruits and seeds of the trees commonly distributed in the Central Asia and Southern Kazakhstan were studied. It showed that the most dangerous pests whose control is necessary and advisable, are the nut moth, pistachio eurytomas, the seed-eating weevil and fruit moth, false acacia eurytoma,

Card 1/2

APPROVED FOR RELEASE: 08/25/2000 CIA-RDP86-00513R000516320015-8"

"APPROVED FOR RELEASE: 08/25/2000 CIA-RDP86-00513R000516320015-8

USSR / General and Specialized Zoology. Insects P
Forest Pests.

Abs Jour : Ref Zhur - Biol., No 17, 1958, No 78324

Flower gall, midges on haloxylon and the large sand lance. Dusting with DDT and particularly with hexachlorocyclohexane is toxic for the adult seed-eating weevils and eurytomas. A double dusting of pistachios in the beginning of the flight of the fruit moth and seed-eating weevils is highly effective. Of the diseases, the most dangerous arepistachio virus of the rosseta type, and rot of the fruits of the pistachio, brown spot disease of walnut fruits, powdery mildew on haloxylon; at the time of storing fruits and seeds, fungi of the oak acorns (Sclerotinia pseudotuberosa), false acacia seeds (Aspergillus glaucus), fruits of the green ash and ash-leaved maple (Alternaria). -- A. P. Adrianov.

Card 2/2

APPROVED FOR RELEASE: 08/25/2000 CIA-RDP86-00513R000516320015-8"

"APPROVED FOR RELEASE: 08/25/2000 CIA-RDP86-00513R000516320015-8

GORSHUNIN, I.Ye., insh.; SHASTIN, V.A., insh.

Carbide lamps for trackwalkers. Put' i put. khoz. no.6:15 Je '58. (MIRA 11:6)
(Lamps) (Railroads--Signaling)

APPROVED FOR RELEASE: 08/25/2000 CIA-RDP86-00513R000516320015-8"

"APPROVED FOR RELEASE: 08/25/2000 CIA-RDP86-00513R000516320015-8

GORSHUNOV, A.

Improve visual signaling on ships. Rech. transp. 22 no.2:43 F '63. (MIRA 16:5)

1. Inzhener-inspektor sudokhodstva Kazanskogo uchastka Volzhskogo basseyna.

(Signals and signaling)

APPROVED FOR RELEASE: 08/25/2000 CIA-RDP86-00513R000516320015-8"

"APPROVED FOR RELEASE: 08/25/2000 CIA-RDP86-00513R000516320015-8

1. GORSHUNOV G.S. Eng.

2. USSR (600)

4. Tsimlyansk Hydroelectric Power Station

7. Concrete for Hydrotechnical structures of the TSimlyansk hydro center, Gidr. stroi. 21, no.12, 1952.

9. Monthly List of Russian Accessions, Library of Congress, April 1953, Uncl.

APPROVED FOR RELEASE: 08/25/2000 CIA-RDP86-00513R000516320015-8"

"APPROVED FOR RELEASE: 08/25/2000 CIA-RDP86-00513R000516320015-8

BARDYSHEV, A.A., inzhener; GORSHUNOV, G.S., inzhener.

Placing concrete at the TSimlyansk hydro development in winter. Gidr.stroi. 23 no.2:10-14 '54. (MLRA 7:4)
(TSimlyansk hydroelectric power station)
(Concrete construction--Cold weather conditions)

APPROVED FOR RELEASE: 08/25/2000 CIA-RDP86-00513R000516320015-8"

"APPROVED FOR RELEASE: 08/25/2000 CIA-RDP86-00513R000516320015-8

GORSHUNOV, G.S., inshener; AKSEL'ROD, Ye.I., inshener.

Heating concrete aggregates at place of storage. Stroi.prom. 33 no.9:4-6 S '55. (MLRA 9:1)

(Concrete)

APPROVED FOR RELEASE: 08/25/2000 CIA-RDP86-00513R000516320015-8"

"APPROVED FOR RELEASE: 08/25/2000 CIA-RDP86-00513R000516320015-8

GORSHUNOV, M.

Standards, Engineering

Standardizing the consumption of material resources is a factor in the effort to economize materials. Za ekon. mat. no. 1, 1952

Monthly List of Russian Accessions, Library of Congress, December 1952. Unclassified.

APPROVED FOR RELEASE: 08/25/2000 CIA-RDP86-00513R000516320015-8"

"APPROVED FOR RELEASE: 08/25/2000 CIA-RDP86-00513R000516320015-8

GORSHUNOV, M.D., otv.red.; PODGORNOVA, V., red.; KAPLAN, I., red.; TROYANOVSKAYA, N., tekhn.red.

[Conversion of enterprises to a seven- and six-hour workday during 1956-1958] Iz opyta perekhoda promyshlennykh predpriiatii na semi- i shestichasovoi rabochii den' v 1956-1958 gg. Moskva, Gos.izd-vo polit.lit-ry, 1959. 145 p. (MIRA 12:3)

1. Moscow. Nauchno-issledovatel'skiy institut truda.
(Hours of labor)

APPROVED FOR RELEASE: 08/25/2000 CIA-RDP86-00513R000516320015-8"

"APPROVED FOR RELEASE: 08/25/2000 CIA-RDP86-00513R000516320015-8

VIGDERGAUZ, M.S.; GOL'BERT, K.A.; GORSHUNOV, O.L.

Analysis of light hydrocarbons by means of molecular sieves. Khim. i tekh.topl.i masel 6 no.7:62-63 Jl '61. (MIRA 14:6)

1. Novokuybyshevskiy filial NIISS.
(Hydrocarbons)

APPROVED FOR RELEASE: 08/25/2000 CIA-RDP86-00513R000516320015-8"

"APPROVED FOR RELEASE: 08/25/2000 CIA-RDP86-00513R000516320015-8

VIGDERGAUZ, M.S.; GOL'BERT, K.A.; ZIMIN, R.A.; GORSHUNOV, O.L.

Gas chromatographic analysis of the products of isobutane oxidation. Neftekhimiia 2 no.3:410-414 My-Je '62. (MIRA 15:8)

1. Nauchno-issledovatel'skiy institut sinteticheskikh spirtov i organicheskikh produktov, Novokuybyshevskiy filial.
(Propane) (Gas chromatography)

APPROVED FOR RELEASE: 08/25/2000 CIA-RDP86-00513R000516320015-8"

"APPROVED FOR RELEASE: 08/25/2000 CIA-RDP86-00513R000516320015-8

VIDERGAUZ, M.S.; GOL'BERG, K.A. [deceased]; Prinimali uchastiye: FANAS'YEV, M.I.; LANTSOVA, L.T.; GORSHUNOV, O.L.

Rapid chromatographic analysis of hydrocarbon gases. Neftekhimiia 2 no.6:825-830 N-D '62. (MIRA 17:10)

1. Nauchno-issledovatel'skiy institut sinteticheskikh spirtov i organicheskikh produktov, Novokuybyshevskiy filial.

APPROVED FOR RELEASE: 08/25/2000 CIA-RDP86-00513R000516320015-8"

"APPROVED FOR RELEASE: 08/25/2000 CIA-RDP86-00513R000516320015-8

BEREZKIN, V.G.; GORSHUNOV, O.L.

Analytical reaction gas chromatography. Usp. khim. 34 no.6: 1108-1126 Je '65. (MIRA 18:7)

1. Institut neftekhimicheskogo sinteza AN SSSR.

APPROVED FOR RELEASE: 08/25/2000 CIA-RDP86-00513R000516320015-8"

"APPROVED FOR RELEASE: 08/25/2000 CIA-RDP86-00513R000516320015-8

BEREZKIN, V.G.; GORSHUNOV, O.L.; GEYDERIKH, M.A.

Use of gas chromatography for studying polymer compounds.
Plast. massy no.11:53-57 '65. (MIRA 18:12)

APPROVED FOR RELEASE: 08/25/2000 CIA-RDP86-00513R000516320015-8"

"APPROVED FOR RELEASE: 08/25/2000 CIA-RDP86-00513R000516320015-8

BEREZKIN, V.G.; GORSHUNOV, G.L.

Use of frontal-chemical concentration method for the chromatographic analysis of microimpurities in carbon dioxide. Izv. AN SSSR. Ser. khim. no.11:2069-2070 '65. (MIRA 18:11)

1. Institut neftekhimicheskogo sintesa im. A.V. Topchiyeva AN SSSR.

APPROVED FOR RELEASE: 08/25/2000 CIA-RDP86-00513R000516320015-8"

"APPROVED FOR RELEASE: 08/25/2000 CIA-RDP86-00513R000516320015-8

GORSHUNOV, S. A.

"The Conditions and Reasons for the Loss of Winter Wheat During Hibernation and the Effect of the Seeding Time on Its Hibernation and Yield on the Right Shore of Gor'kovskaya Oblast." Cand Agr Sci, Gor'kiy Agricultural Inst, Min Higher Education USSR, Gor'kiy, 1955. (KL, No 18, Apr 55)

SO: Sum. No. 704, 2 Nov 55 - Survey of Scientific and Technical Dissertations Defended at USSR Higher Educational Institutions (16).

APPROVED FOR RELEASE: 08/25/2000 CIA-RDP86-00513R000516320015-8"

"APPROVED FOR RELEASE: 08/25/2000 CIA-RDP86-00513R000516320015-8

GORSHUNOV, V.N.

GORSHUNOV, V.N.

Nestatsionarnye protsessy v kontsentricheskom kabele. (Elektrosviaz', 1941, no.3 p. 45-48, illus., diagrs.)

Title tr.: Non-stationary process in a coaxial cable.

TK4E744

SO: Aeronautical Sciences and Aviation in the Soviet Union, Library of Congress, 1955

APPROVED FOR RELEASE: 08/25/2000 CIA-RDP86-00513R000516320015-8"

"APPROVED FOR RELEASE: 08/25/2000 CIA-RDP86-00513R000516320015-8

GORSHUNOV, V. N.

Synchronizing Pulse Generator on 625 Lines. (Central Bureau of Technical Information, Ministry of the Communications Equipment Industry. Radio Engineering Symposium. Gosenergoizdat, 1947, 184 pp.)

APPROVED FOR RELEASE: 08/25/2000 CIA-RDP86-00513R000516320015-8"

"APPROVED FOR RELEASE: 08/25/2000 CIA-RDP86-00513R000516320015-8

GORSHUNOV, V.N.

SA

B 66

0

Investigation of the stable locking range of a synchronizing generator. GORSHUNOV, V. N. Радиотехника, 2 (No. 1) 62-72 (1947). In Russian.—A synchronizing generator, developed for the Moscow television transmitter and based on Bedford and Smith's instrument [RCA Rev., 8, 51-76 (July, 1949)] is described. Starting with a 2× line frequency (625 lines) output of a reactance valve type generator, half-frame pulses are derived by multiple division and applied to a bridge circuit which is locked by the 50 c/s mains frequency. Experimental and analytical data on locking and dividing stability are presented. A. L.

ASM-SLA METALLURGICAL LITERATURE CLASSIFICATION

APPROVED FOR RELEASE: 08/25/2000 CIA-RDP86-00513R000516320015-8"

"APPROVED FOR RELEASE: 08/25/2000 CIA-RDP86-00513R000516320015-8

GORDHUNOVA, L. P.

"Experimental Poliomyelitis in Small Rodents." Cand Med Sci, Inst of Virology, Acad Med Sci USSR, Moscow, 1953. (RZhBiol, No 1, Sep 54)

SO: Sum 432, 29 Mar 55

APPROVED FOR RELEASE: 08/25/2000 CIA-RDP86-00513R000516320015-8"

"APPROVED FOR RELEASE: 08/25/2000 CIA-RDP86-00513R000516320015-8

GORSHUNOVA, L.P.

Experimental poliomyelitis in small rodents with various methods of infection. Zhur. mikrobiol. epid. i immun. no.10:59-61 O '54. (MLRA 8:1)

1. Iz laboratorii beshenstva (zav. doktor meditsinskikh nauk R.M.Shen) Instituta virusologii imeni D.I.Ivanovskogo AMN SSSR (dir. prof. P.N.Kosyakov)

(POLIOMYELITIS, experimental, infect. methods in small rodents)

APPROVED FOR RELEASE: 08/25/2000 CIA-RDP86-00513R000516320015-8"

"APPROVED FOR RELEASE: 08/25/2000 CIA-RDP86-00513R000516320015-8

APPROVED FOR RELEASE: 08/25/2000 CIA-RDP86-00513R000516320015-8"

"APPROVED FOR RELEASE: 08/25/2000 CIA-RDP86-00513R000516320015-8

GORSHUNOVA, L.P.

GORSHUNOVA, L.P. [redacted]

Infection with poliomyelitis through the gastrointestinal tract. Zhur.nevr. i psikh. 55 no.2:102-105 F '55. (MLRA 8:4)

1. Institut virusologii imeni D.N.Ivanovskogo (dir. prof. P.N. Kosyakov) AMN SSSR.
(POLIOMYELITIS, experimental, gastrointestinal route of infect.)

APPROVED FOR RELEASE: 08/25/2000 CIA-RDP86-00513R000516320015-8"

"APPROVED FOR RELEASE: 08/25/2000 CIA-RDP86-00513R000516320015-8

GORSHUNOVA, L.P

EXCERPTA MEDICA Sec.4 Vol.11/4 Med.Microb. etc. April58

1050. EFFECTIVENESS OF EXPERIMENTAL ANTIRABIES INOCULATION (Russian text) - Gorshunova L. P. Inst. of Virol., USSR Acad. of Med. Sci., Moscow - VOPR. VIRUSOL. 1956, 6 (20-22)

Study was made of the minimal intervals that must elapse between vaccination and the subsequent infection for vaccination to be effective. Experiments were carried out on white rats, which were vaccinated s. c. daily for 10 days with 0.5 ml. of Fermi's vaccine. When these rats were infected 20 hr. after commencement of vaccination there were cases of disease and death from rabies. The nature of the infection was the same as in control rats. On the 10th day penetration of virus of rabies into the CNS was detected and Babes-Negri bodies were found in neurons of Ammon's horn. When the infection took place 3, 6, 13 or 36 days after the beginning of vaccination, neither disease nor death of any of the animals was observed. The virus was detected at the site of inoculation within 24 hr. In a few cases the virus was isolated from the sciatic nerve and salivary glands of vaccinated animals 3 days after infection. The virus was not found in the CNS. In this way it was possible under the experimental conditions to prevent the development of rabies in animals if the immunization was started 3 days before infection.

Kaulen - Moscow (S)

APPROVED FOR RELEASE: 08/25/2000 CIA-RDP86-00513R000516320015-8"

"APPROVED FOR RELEASE: 08/25/2000 CIA-RDP86-00513R000516320015-8

GORSHUNOVA, L.P.

Age characteristics in the course of poliomyelitis. Zhur.mikrobiol. epid. i immun. 27 no.4:83-87 Ap '56. (MIRA 9:7)

1. Iz Instituta virusologii imeni D.I.Ivanovskogo AMN SSSR
(POLIOMYELITIS, exper.
in rats of various ages)
(AGING, physiol.
age factor in exper. polio. in rats)

APPROVED FOR RELEASE: 08/25/2000 CIA-RDP86-00513R000516320015-8"

"APPROVED FOR RELEASE: 08/25/2000 CIA-RDP86-00513R000516320015-8

USSR / Virology. Human and Animal Viruses. Rabies Virus. E-3

Abs Jour : Ref Zhur - Biol., No 18, 1958, No 81283

Author : ~~Gorshunova, L. P.~~
Inst : ~~Not given~~ ~~Inst.~~ Virology im. D.A. Ivanovskiy, Acad. Med. Sci. USSR.
Title : An Experimental Study of Methods to Increase the Efficacy of Antirabic Vaccination.

Orig Pub : Zh. mikrobiol., epidemiol. i immunobiologii, 1957, No. 7, 32-37.

Abstract : A study was conducted on the efficiency of different means of injecting antirabic vaccine into white rats before and after infecting them with the street strain of rabies virus. Divided introduction of vaccine at short intervals (30 mins. - 2 hours) was more effective than ordinary vaccination. Similar results were obtained when antirabic gamma-globulin was introduced first. -- I. A. Shumeykina.

Card 1/1

APPROVED FOR RELEASE: 08/25/2000 CIA-RDP86-00513R000516320015-8"

"APPROVED FOR RELEASE: 08/25/2000 CIA-RDP86-00513R000516320015-8

GORSHUNOVA, L.P.

66. **Latent Pasteurellosis Provoked by Ringing of Bell**

"Concerning the Mechanism of Provoking Asymptomatic Infection," by L. P. Gorshunova and A. M. Monayenkov, Institute of Normal and Pathological Physiology and Institute of Virology, Academy of Medical Sciences USSR, Doklady Akademii Nauk SSSR, Vol 112, No 6, 21 Feb 57, pp 1142-1144

The present research concerns the fact that prolonged stimulation by the sound of a bell is capable of changing an asymptomatic benigh infection into a lethal disease.

It has been established that the stimulation by the sound of a bell for one or 2 hours per day over a period of 5 or 6 days sharply disturbs the dynamics of cortical processes of rats, leading to disturbances and the possible collapse of their higher nervous activity. This research was conducted on 127 albino rats using the Monayenko method (previously described). Thirty-five animals showed signs of the disease within 5 days. Signs of sickness included paralysis of the hind extremities and disturbed coordination and convulsions which appeared in 17 of the animals within 36-48 hours and ended in the death of all of them within 4 days. The other 18 animals showed signs of sickness between the fourth and fifth day. The

APPROVED FOR RELEASE: 08/25/2000 CIA-RDP86-00513R000516320015-8"

"APPROVED FOR RELEASE: 08/25/2000 CIA-RDP86-00513R000516320015-8

symptoms included rhinitis, first mucillagenous then mucillagenous and purulent, and finally catarrhal conjunctivitis. Most of these animals died between the 4th and the 12th day. There was abrupt loss of weight, ascitis, and hematurea.

Pathomorphological studies of the central nervous system and of the internal organs revealed the same picture, i. e., serious hemorrhagic exudates in the pleural and abdominal regions, fine petechial hemmorhages in the mucous membranes of the trachea and bronchi, and some hemorrhage in the lungs. The size of the liver was somewhat increased and that of the kidneys was greatly enlarged. Often there were abscesses containing thick viscous pus in the subcutaneous tissues. Macroscopic changes in the central nervous system and internal organs of the animals dying after the appearance of coordination disturbances included an definite thickening of the dura mater. In the majority of cases, the vessels of the brain were dilated, the vascular endothelium was swollen, and there were signs of monocytic meningitis. The spinal cord showed signs of its vessels swelling, exudate in the central canal, and hyperchromatosis of individual cells. The lungs showed dilatation of the alveoli, thickening of interalveolar walls, and, in individual cases, pneumonia foci. The liver was hyperemic and contained necrotic foci. The kidneys were so injured that the outline of the follicles was almost obliterated, and numerous necrotic foci appeared.

APPROVED FOR RELEASE: 08/25/2000 CIA-RDP86-00513R000516320015-8"

"APPROVED FOR RELEASE: 08/25/2000 CIA-RDP86-00513R000516320015-8

Although the morphological picture of the changes in the organs of the animals was identical, the degree of injury differed depending on clinical symptoms of the disease. The animals showing neurological injuries of the central nervous system, and those suffering of the upper respiratory passages had more severe pathological in the internal organs (lungs, kidneys and liver).

oscopic studies of the central nervous system showed bipolar ells measuring 1-2 microns and appearing in the abscesses of d meningeal foci. Samples taken from these abscesses and at peptone bouillon were used intranasally and intraperi- bino mice and rats. The mice died in 22-24 hours after . Histological studies showed fine petechial hemor- us membranes of the trachea and bronchi and gastroin- elling of kidneys, acute hyperemia, and other clinical ith those caused by stimulation by the sound of a

cted in the rats that became sick spontaneously perimentally inoculated with material obtained hibiting bipolar staining and measuring 1-2 he causative agents of the disease. Since all the animals which became sick spontane- , it must be that the various clinical same disease.

APPROVED FOR RELEASE: 08/25/2000 CIA-RDP86-00513R000516320015-8"

"APPROVED FOR RELEASE: 08/25/2000 CIA-RDP86-00513R000516320015-8

The authors conclude that, because of the clinical symptoms, the morphological changes in internal organs, the clinical picture of the experimentally reproduced disease, and the characteristic type of the isolated causative agent, the above described disease must be pasteurellosis. Pasteurella may be dormant in the mucous membrane of the upper respiratory passages without causing any clinically expressed disease. In this research, the provoking agent was stimulation by the sound of a bell which caused acute disturbances of cortical dynamics and a type of collapse of higher nervous activity. (U)

Sum 1424

APPROVED FOR RELEASE: 08/25/2000 CIA-RDP86-00513R000516320015-8"

"APPROVED FOR RELEASE: 08/25/2000 CIA-RDP86-00513R000516320015-8

KOSYAKOV, Pavel Nikolayevich, red.; SHEN, R.M., red.; GORSHUNOVA, L.P., red.

[Rabies; etiology, pathogenesis, and prophylaxis] Beshenstvo; etiologiia, patogenez, i profilaktika. Moskva, Medgiz, 1958. (MIRA 12:3)
217 p.

1. Akademiya meditsinskikh nauk SSSR, Moscow. Institut virusologii.
(RABIES)

APPROVED FOR RELEASE: 08/25/2000 CIA-RDP86-00513R000516320015-8"

"APPROVED FOR RELEASE: 08/25/2000 CIA-RDP86-00513R000516320015-8

EXCERPTA MEDICA Sec 4 Vol 12/9 Med. Micro. Sept 59

2864. REGARDING ASYMPTOMATIC FORMS OF RABIES (Russian text) - Gorshunova L. P. - VOPR. VIRUSOL. 1958, 2 (110-111)

Eighty rats were examined, who failed to develop rabies in a period of 100-160 days after inoculation with large doses of viruses (0.5 ml. of brain suspension diluted 1:10). Fifty rats were found to have inflammatory changes. In 3 rats, Negri bodies were found.

Tarabčák - Košice (IV, 17)

APPROVED FOR RELEASE: 08/25/2000 CIA-RDP86-00513R000516320015-8"

"APPROVED FOR RELEASE: 08/25/2000 CIA-RDP86-00513R000516320015-8

GORSHUNOVA, Lyudmila Pavlovna

[Experimental study of the pathogenesis of poliomyelitis] Opyt eksperimental'nogo izucheniia patogeneza poliomielita. Moskva, Medgiz, 1960. 94 p. (MIRA 14:9)

(POLIOMYELITIS)

APPROVED FOR RELEASE: 08/25/2000 CIA-RDP86-00513R000516320015-8"

"APPROVED FOR RELEASE: 08/25/2000 CIA-RDP86-00513R000516320015-8

GORSHUNOVA, L.P.

Role of the lymph nodes in the mechanism of natural resistance to rabies. Zhur. mikrobiol., epid. i immun. 33 no.2:45-48 F '62. (MIRA 15:3)

1. Iz Instituta virusologii imeni Ivanovskogo AMN SSSR.

(RABIES)

(LYMPHATICS) (IMMUNITY)

APPROVED FOR RELEASE: 08/25/2000 CIA-RDP86-00513R000516320015-8"

"APPROVED FOR RELEASE: 08/25/2000 CIA-RDP86-00513R000516320015-8

PLETSITYY, D. F., KRASNYANSKAYA, V. G., Institute of Normal and Pathological Physiology. Academy of Medical Sciences USSR [1962 positions] - "Changes in egg-white lysozyme content during embryogeny processes" Session 1; PLETSITYY, D. F. - Co-Chairman, Session 3; PLETSITYY, D. F., Institute of Normal and Pathological Physiology, Academy of Medical Sciences USSR, Moscow [1962 position]; AVER'YANOVA, L. L., FIDEL'MAN, E. G., both of All-Union Scientific Research Institute of Antibiotics [1961 positions] - "Antibiotics and lysozyme" Session 3; PLETSITYY, D. F., Institute of Normal and Pathological Physiology, Academy of Medical Sciences USSR, Moscow [1962 position]; FIDEL'MAN, E. G., All-Union Scientific Research Institute of Antibiotics [1961 position]; GORSHUNOVA, L. P., [illegible] Virology imeni D. I. Ivanovskiy, Academy of Medical Sciences USSR [1962 position] - "Lysozyme and immunogenesis - New findings"

Report to be presented at The Third International Symposium on Fleming's Lysozyme, Milan Italy, from 3-5 Apr '64

APPROVED FOR RELEASE: 08/25/2000 CIA-RDP86-00513R000516320015-8"

"APPROVED FOR RELEASE: 08/25/2000 CIA-RDP86-00513R000516320015-8

GORSHUNOVA, L.P.

Study of specific antirabies gamma-globulin from the blood serum of persons vaccinated against rabies. Vop. virus 8 no.5:626-627 S-O'63 (MIRA 17:1)

1. Institut virusologii imeni D.I.Ivanskogo AMN SSSR, Moskva.

APPROVED FOR RELEASE: 08/25/2000 CIA-RDP86-00513R000516320015-8"

"APPROVED FOR RELEASE: 08/25/2000 CIA-RDP86-00513R000516320015-8

GORSHUNOVA, L.P.

Revaccination against rabies. Zhur. mikrobiol., epid. i immun. 40 no.4:123-127 Ap '63. (MIRA 17:5)

1. Iz Instituta virusologii imeni Ivanovskogo AMN SSSR.

APPROVED FOR RELEASE: 08/25/2000 CIA-RDP86-00513R000516320015-8"

"APPROVED FOR RELEASE: 08/25/2000 CIA-RDP86-00513R000516320015-8

PLETSITYY, D.F.; GORSHUNOVA, L.P.; FIDEL'MAN, Ye.S.

Immunogenesis and nonspecific factors of natural resistance Report No.2: Effect of antirabies vaccination on the lysozyme content of human saliva and blood. Zhur. mikrobiol., epid. i immun. 40 no.10:38-42 O '63. (MIRA 17:6)

1. Iz Instituta normal'noy i patologicheskoy fiziologii i Instituta virusologii imeni Ivanovskogo AMN SSSR.

APPROVED FOR RELEASE: 08/25/2000 CIA-RDP86-00513R000516320015-8"

"APPROVED FOR RELEASE: 08/25/2000 CIA-RDP86-00513R000516320015-8

GORSHUNOVA, I.P.

Mechanism of specific serum prophylaxis for rabies. Vop.med.virus. no.8:116-121 '63.

Importance of the immunization system in the effectiveness of the combined active passive method of specific prophylaxis for rabies. Ibid.:122-125 (MIRA 17:10)

APPROVED FOR RELEASE: 08/25/2000 CIA-RDP86-00513R000516320015-8"

"APPROVED FOR RELEASE: 08/25/2000 CIA-RDP86-00513R000516320015-8

GOLOV, Aleksey Pavlovich; OSADA, P.A., red.; GORSHUNOVA, M.D., red.; PONOMAREVA, A.A., tekhn. red.

[Planning organizational and technical measures at an enterprise] Planirovanie organizatsionno-tekhnicheskikh meropriiatii na predpriiatii. Pod red. M.D.Gorshunova. Izd.2., perer. i dop. Moskva, Gos. izd-vo planovo-ekon. lit-ry, 1961. 173 p. (MIRA 14:8)
(Industrial management)

APPROVED FOR RELEASE: 08/25/2000 CIA-RDP86-00513R000516320015-8"

"APPROVED FOR RELEASE: 08/25/2000 CIA-RDP86-00513R000516320015-8

YERSHOV, V. S.: GORSHUNOVA, O. K.: MALYGIN, S. A.

1935. Rabota 142 Sge v sunskom rayone, kirovskogo kraya. Tr. kirov. Zoovet. in-ta, t. II, vysh. 1-2 (5-6)

APPROVED FOR RELEASE: 08/25/2000 CIA-RDP86-00513R000516320015-8"

"APPROVED FOR RELEASE: 08/25/2000 CIA-RDP86-00513R000516320015-8

AUTHORS: Petrova, A. A., Tsvetkova, Ye. V., Gorshunova, V. M. SOV/48-23-6-5/28

TITLE: Electron-microscopical Investigations of Finely Dispersed Iron Carbonyl (Elektronnomikroskopicheskoye issledovaniye tonkodispersnogo karbonil'nogo zheleza)I. Elaboration of Methods (I.Razrabotka metodiki)

PERIODICAL: Izvestiya Akademii nauk SSSR. Seriya fizicheskaya, 1959, Vol 23, Nr 6, pp 687 - 689 (USSR)

ABSTRACT: Iron carbonyl must, when the conditions for the segregation of $Fe(CO)_5$ are investigated, be divided qualitatively into two different forms: 1) Filar powder. 2) Powder consisting of spherical iron carbonyl particles. In the present paper, the methods of investigation are worked out. The preparation of the samples is carried out in two parts: 1)Grinding and polishing of the sample. 2) Production of a replica. In the discussion of the first part, the dimensions of the sample, the polishing paste (aluminum oxide), and the etching acid are given. The latter is nitric acid diluted in alcohol. The replica is produced by means of a collodium solution in amyl acetate. In the course of the investigation, the following distinction is made between four

Card 1/2

APPROVED FOR RELEASE: 08/25/2000 CIA-RDP86-00513R000516320015-8"

"APPROVED FOR RELEASE: 08/25/2000 CIA-RDP86-00513R000516320015-8

Electron-microscopical Investigations of Finely Dispersed SOV/48-23-6-5/28
Iron Carbonyl. I. Elaboration of Methods

different particles: 1) Those having a pure bulbous structure, 2) those having a disturbed bulbous structure, 3) bulbousless structure, and 4) fragment particles. Examples are given by 8 figures of the two different kinds of iron carbonyl and the four different kinds of structure. There are 4 figures and 10 references, 6 of which are Soviet.

Card 2/2

APPROVED FOR RELEASE: 08/25/2000 CIA-RDP86-00513R000516320015-8"

"APPROVED FOR RELEASE: 08/25/2000 CIA-RDP86-00513R000516320015-8

GORSIC, J.

The spa in Rogaska Slatina, Slovenia. P. 16. (TOURIST REVIEW, Vol. 2, No. 3, Sept. 1953, Beograd, Yugoslavia.)

SO: Monthly List of East European Accessions, (EEAL), LC, Vol. 3, No. 12, Dec, 1954, Uncl.

APPROVED FOR RELEASE: 08/25/2000 CIA-RDP86-00513R000516320015-8"

"APPROVED FOR RELEASE: 08/25/2000 CIA-RDP86-00513R000516320015-8

GORSIN, S.

Mathematical Reviews
Vol. 14 No. 8
Sept. 1953
Analysis

8-10-54
LL

Gorsin, S. Some criteria of stability with constant disturbances. Izvestiya Akad. Nauk Kazah. SSR 1950, no. 97, Ser. Mat. Meh. 4, 51–56 (1950). (Russian)

These two papers take up the application of Lyapunov's second method [see Problème général de la stabilité du mouvement, Princeton, 1947, p. 255; these Rev. 9, 34] or the general idea of stability to an equation

$$\dot{x}=w(t;x)+f(t;x) \tag{1}$$

where x, w, f are vectors with a countable number of components, $w(t;0)=0$, w and f are continuous in a set $|x_n|<A$, $n=1,2,\cdots$, $t>\tau$ and in that set each $|f_n|$ can be made $<\rho$, any given positive number. In general, the author shows that the stability situation as obtained from Lyapunov's theorem or in general for (1) without f is unchanged by the presence of f. *S. Lefschetz* (Princeton, N. J.).

Math
2
3

APPROVED FOR RELEASE: 08/25/2000 CIA-RDP86-00513R000516320015-8"

"APPROVED FOR RELEASE: 08/25/2000 CIA-RDP86-00513R000516320015-8

GORSIN, S.

Scientific principles of preservation of beechwood on the yards. Tr. from the Russian. p. 2.

DRVNA INDUSTRIJA. (Institut za drvno-industrijska istrazivanja) Zagreb, Yugoslavia. Vol. 10, no. 1/2, Jan./Feb. 1959.

Monthly list of East European Accessions (EEAI) LC, Vol. 8, no. 9, Sept. 1959

Uncl.

APPROVED FOR RELEASE: 08/25/2000 CIA-RDP86-00513R000516320015-8"

"APPROVED FOR RELEASE: 08/25/2000 CIA-RDP86-00513R000516320015-8

GORSINKO, I.I.

"Prevention and Treatment of Influenza and Acute Catarrh of Upper Respiatory Tracts by Means of Antibiotics,"

p. 354 Ministry of Health USSR Proceedings of the Second All-Union Conference on Antibiotics, 31 May - 9 June 1957. p. 405, Moscow, Medgiz, 1957.

APPROVED FOR RELEASE: 08/25/2000 CIA-RDP86-00513R000516320015-8"

"APPROVED FOR RELEASE: 08/25/2000 CIA-RDP86-00513R000516320015-8

GORSIRIDZE, G. D.

Gorsiridze, G. D. - "A generalized method of the kinematic calculation of drives for metal-cutting machines," A commemorative collection of transactions dedicated to the 25th anniversary of the Institute, (Gruz. politekhn in-t im. Kirova. No.17), Tbilisi, 1948, p. 203-23, (In Georgian, resume in Russian)

SO: U-5240, 17, Dec. 53, (Letopis 'Zhurnal 'nykh Statey, No. 25, 1949).

APPROVED FOR RELEASE: 08/25/2000 CIA-RDP86-00513R000516320015-8"

"APPROVED FOR RELEASE: 08/25/2000 CIA-RDP86-00513R000516320015-8

L 31845-66 T JK

ACC NR: AP6021322 (A) SOURCE CODE: PO/0081/65/019/003/0309/0313

AUTHOR: Jeljaszewicz, J.; Hawiger, J.; Czacka, J.; Cygankiewicz-Siennicka, H.; Gorska, A.; Gulinski, J.; Hebenstreit, C.; Klimek, H.; Klapowska, K.; Krol, J.; Lehartowicz, C.; Luft, A.; Moskwa, Z.; Nocon, I.; Pawlowska, I.; Padrycz, W.; Parnal, C C.; Pogorzelska, A.; Rodzinski, L.; Siennicki, W.; Sikora, G.; Szymanczyk, I.; Terech, I.; Wawrzynska, M.; Wencel, Z.; Znis, A.

ORG: Institute of Bacertiology, PZH, Warsaw (Zaklad Bakteriologii); Regional and City Sanitary Epidemiological Centers, Bydgoszcz, Katowice, Kielce, Krakow, Lodz, Opole, Rzezov, Warsaw, Wroclaw (Wojewodzka i Miejska Stacj Sanitarno-Epidemiologiczna); Bacteriologic Laboratory, No. 3, PSK, Wroclaw (Laboratorium Bakteriologiczny)

TITLE: Antibiotic-resistant strains of Streptococcus viridans, Streptococcus Fecalis, Escherichia coli, Pseudomonas aeruginosa, Proteus species and Klebsiella species, isolated in Poland in 1960-1963

SOURCE: Przeglad epidemiologiczny, v. 19, no. 3, 1965, 309-313

TOPIC TAGS: bacteriology, penicillin, streptomycin, tetracycline, erythromycin, neomycin

ABSTRACT: Sensitivity tests of the above strains were carried out in respect to penicillin, streptomycin, tetracyclines, chloramphenicol, erythromycin and neomycin. It was found that resistance to antibiotics in Streptococci differed from that in Gram-negative bacilli. Streptococcus fecalis was found highly resistant to penicillin and erythromycin. Appreciable resistance to all antibiotics was noted in strains identified as Streptococcus viridans. Resistance varied according to samples and territorial distribution. Experiments were conducted in 11 centers throughout the country simultaneously; results were compared with those obtained in an identical experimental series in a single hospital environment. Orig. art. has: 2 tables. [JPRS]

SUB CODE: 06/ SUBM DATE: none/ ORIG REF: 001/ OTH REF: 001

Card 1/1 JS

APPROVED FOR RELEASE: 08/25/2000 CIA-RDP86-00513R000516320015-8"

"APPROVED FOR RELEASE: 08/25/2000 CIA-RDP86-00513R000516320015-8

TONDOS, Julian; GORSKA, Anna; RADECKI, Aleksander

Pulmonary tuberculosis and fitness for the teaching profession (attempted establishment of criteria). Gruslica 30 no.9:867-874 '62.

(TUBERCULOSIS, PULMONARY) (TEACHING)
(OCCUPATIONS AND PROFESSIONS)

APPROVED FOR RELEASE: 08/25/2000 CIA-RDP86-00513R000516320015-8"

"APPROVED FOR RELEASE: 08/25/2000 CIA-RDP86-00513R000516320015-8

GORSKA, Ewa; NIEMAND, Doreta

Anesthesia in bilateral adrenalectomy in inoperable breast cancer. Pol. przegl. chir. 36 no.11:1327-1331 N '64

1. Z Oddziału Chirurgicznego Instytutu Onkologii w Warszawie (Kierownik: prof. dr. T. Koszarowski).

APPROVED FOR RELEASE: 08/25/2000 CIA-RDP86-00513R000516320015-8"

"APPROVED FOR RELEASE: 08/25/2000 CIA-RDP86-00513R000516320015-8

ALBERT, Zygmunt; MEDRAS, Kazimierz; GORSKA, Irena

Further studies on the effect of environment on the development of spontaneous mammary cancer and malignant mesenchymal tumors in mice. Acta medica polona 3 no.2:131-136 '62.

1. Polish Academy of Sciences, Institute of Immunology and Experimental Therapy Department of Experimental Oncology and Department of Pathological Anatomy, Medical Academy, Wroclaw, Poland Director: Professor Dr. S. Slopek.

(BREAST NEOPLASMS veterinary) (MESENCHYMOMA veterinary)
(MICE neoplasms) (ENVIRONMENT)

APPROVED FOR RELEASE: 08/25/2000 CIA-RDP86-00513R000516320015-8"

"APPROVED FOR RELEASE: 08/25/2000 CIA-RDP86-00513R000516320015-8

GORSKA, J.; PAKULA, K.

Preliminary investigations on the serologic classification of streptococci. Med.dosw.Mikrob. 2 no.2:239-240.1950. (CLML 20:6)

1. Summary of the report given at 10th Congress of the Polish Microbiological and Epidemiological Society held in Gdansk, Sept. 1949. (Warsaw)

APPROVED FOR RELEASE: 08/25/2000 CIA-RDP86-00513R000516320015-8"

"APPROVED FOR RELEASE: 08/25/2000 CIA-RDP86-00513R000516320015-8

GORSKA, Jadwiga

PAKULA, Roman, Dr med., GORSKA, Jadwiga, dr med.; PAGOWSKA-WAWRZYNSKA, Jadwiga, dr med.

Hemagglutination reaction in primary chronic rheumatism. Postepy reumat. no.1:102-113 1954.

1. Z Panstwowego Zakladu Higieny Dyrektor: prof. F.Przesmucki i z Panstwowego Instytutu Reumatologicznego Dyrektor: prof. dr E. Reicher.

(ARTHRITIS, RHEUMATOID, immunology, hemagglut.)
(HEMAGGLUTINATION, in various diseases, rheum. arthritis)

APPROVED FOR RELEASE: 08/25/2000 CIA-RDP86-00513R000516320015-8"

"APPROVED FOR RELEASE: 08/25/2000 CIA-RDP86-00513R000516320015-8

GORSKA, Jadwiga; MUCHNICKA, Dorota

Attempted classification of human strains of Streptococcus viridans. Med.dosw.mikrob. 7 no.4:361-369 1955.

1. Z Panstwowego Zakladu Higieny w Warszawie.
(STREPTOCOCCUS,
viridans, classif. of human strains)

APPROVED FOR RELEASE: 08/25/2000 CIA-RDP86-00513R000516320015-8"

"APPROVED FOR RELEASE: 08/25/2000 CIA-RDP86-00513R000516320015-8

GORSKA, Jadwiga; MUCHNICKA, Dorota; KOWALCZYK, Janina

Evaluation of biological method of blood examination of endocarditis lenta. Med.dosw.mikrob. 7 no.4:457-463 1955.

1. Z Panstwowego Zakladu Higieny w Warszawie.
(ENDOCARDITIS, SUBACUTE BACTERIAL, bacteriology, blood exam. biol.methods)

APPROVED FOR RELEASE: 08/25/2000 CIA-RDP86-00513R000516320015-8"

"APPROVED FOR RELEASE: 08/25/2000 CIA-RDP86-00513R000516320015-8

GORSKA, K.

Effect of 2-thio-4-methyl-5-isobuthyluracil on the bone marrow, peripheral blood, thyroid gland, and parenchymatous organs in the rabbit. p. 83. DAFM
FOLIA BIOLOGICA. (Panstwowe Wydawnictwo Naukowe), Warszawa. Vol. 1, nos, 2-4. 1953. Vol. 2, no. 3-4, 1954, DAFM Vol. 3, no. 1, 1955.

So. East European Accessions List. Vol. 5, no. 1, Jan. 1956.

APPROVED FOR RELEASE: 08/25/2000 CIA-RDP86-00513R000516320015-8"

"APPROVED FOR RELEASE: 08/25/2000 CIA-RDP86-00513R000516320015-8

BORSKA, MARIA

The inhibitive effect of gases on the oxidizing or reducin. effects of ultrasonic energy. P. Doman. *Proc. Polish Conf. Ultrasonics, 2nd*, 1956, 17-19(Pub. 1957)(in English). —The potential of the Pt electrode in 0.1*N* $K_4Fe(CN)_6$ was increased and in $K_3Fe(CN)_6$ decreased, by 10-25 mv. after 6 min. irradiation by an 800-kc. 15-w./sq. cm. generator. The effect is attributed to α-ionization. Intermolecular forces and acoustic properties of liquids. Franciszek Kuczera (Wyższa Szkoła Rolni, Olsztyn). *Ibid.* 55-8 (in English).—By substitution of a Lennard-Jones (6-*n*) intermol. potential in the Kudriavtsev equation for the velocity of sound propagation, an equation was obtained by which the exponent *n* was calcd. from exptl. data and found between 12 and 18 for 30 liquids (cf. *C.A.* 52, 15994a). Hence the relative thermal coeff., α, was related to that of thermal expansion, β, by the equation $\alpha = (n/6)\beta$, which was verified, again with $14 \leq n \leq 18$. Determination of electric, piezo electric, and elastic constants of barium titanate ceramics. Wincenty Pajewski (Polska Akad. Nauk, Warsaw). *Ibid.* 71-6(in English).—Math. Compliance, dielec. const. and piezoelec. tensors are theoretically considered and relations between various matrix elements are derived. Producing suspensions by means of ultrasonics. A. Piotrowska, M. Górska, and J. Zieniuk (Inst. Chem. Ogólnej, Warsaw). *Ibid.* 77-82(in English).—A few expts. on carbon black-water and $MnCO_3$-rape oil systems are described. Luminescence and oxidizing action of ultrasonic waves in water in the presence of rare gases. R. O. Prudhomme (Inst. Pasteur, Paris). *Ibid.* 83-6(in French).—Water, degassed and satd. with He, Ne, Kr, Xe, air, O, or N, was exposed for 30 min. to the action of 960-kc. ultrasonic waves, (6 w./sq. cm.). Luminescence and formation of H_2O_2 were observed. O plays no essential role. Effect of ultrasonic waves on

APPROVED FOR RELEASE: 08/25/2000 CIA-RDP86-00513R000516320015-8"

"APPROVED FOR RELEASE: 08/25/2000 CIA-RDP86-00513R000516320015-8

GORSKA, MARIA.

J-4

POLAND/Acoustics - Ultrasonics

Abs Jour : Ref Zhur - Fizika, No 4, 1959, No 6586

Author : Piotrowska A., Gorska M., Zieniuk J.
Inst : Institute of General Chemistry, Poland
Title : Studies on Production of Suspensions by Means of Ultrasonic [sic!]

Orig Pub : Proc. II conf. ultrason., 1956, Warszawa, PWN, 1957, 77-82

Abstract : The authors have investigated experimentally the dependence of the concentration of the suspension on the intensity of ultrasound and on the exposure time for various substances, and also the dependence of the time of total dispersi on of the substance on the intensity ofthe ultrasound. Correspond-ing graphs are given. It is concluded that the dispersion of the substance is effected by the following factors: in-tesnity, frequency, and acting time of theultrasound, char-acter of the sound field, temperature at which the process occurs, the form of the liquid in which the dispersion of the substance takes place (denisty, viscosity, surface tension etc.),

Card : 1/2

APPROVED FOR RELEASE: 08/25/2000 CIA-RDP86-00513R000516320015-8"

"APPROVED FOR RELEASE: 08/25/2000 CIA-RDP86-00513R000516320015-8

GORSKA, M.

21

Experiments on the dispersion of pigments by ultrasonics. Maria Górska. *Przemysł Chem.* 38, 48-51(1959)(English and Russian Summaries).—Pigment Green B, Phthalocyanine Blue B, and Carbon-Black, in water alone, and water with the addn. of Turkey red oil and Eriphor A, EW, or O were investigated. Dispersions of a low concn. were easier to prep. than concd. To obtain a 10% dispersion of Pigment Green B the addn. of Turkey red oil or Eriphor O gave good results. A 10% dispersion of Phthalocyanine Blue B required Eriphor A. A dispersion of Acetylene Black could not be prepd. All these dispersions were regarded as satisfactory if the particles were $\leq 4\mu$. In the above expts. an ultrasound generator with 500 Kc./sec. frequency was used.

L. G. Manitius

5

Mt

41

APPROVED FOR RELEASE: 08/25/2000 CIA-RDP86-00513R000516320015-8"

"APPROVED FOR RELEASE: 08/25/2000 CIA-RDP86-00513R000516320015-8

89147
P/016/60/014/012/002/002
B103/B207

24.1800

AUTHOR: Górska, Maria, Senior Assistant

TITLE: Chemical effect of ultrasonics

PERIODICAL: Wiadomości chemiczne, v. 14, no. 12 (162), 1960, 759-778

TEXT: The author gives a survey of the chemical effect of ultrasonics by way of examples from literature (apart from depolymerization and the electrochemical processes). She does not mention own studies. By means of the following examples she discusses the effect of ultrasound: Oxidation and reduction, acceleration of coagulation, as well as polymerization; a simultaneous depolymerization was observed in the latter case. Hydrolysis is also frequently accelerated, some substances are brought to explosion, photographic plates are blackened, and a crystallization from oversaturated solutions and from undercooled liquids is brought about. The effect of ultrasonics in these processes has remained unexplained in many cases. A number of researchers have proven that cavitation is the reason for the chemical processes occurring in the ultrasonic field. The author defines cavitation is the formation of bubbles in liquids and their rapid collapse.

Card 1/5

APPROVED FOR RELEASE: 08/25/2000 CIA-RDP86-00513R000516320015-8"

"APPROVED FOR RELEASE: 08/25/2000 CIA-RDP86-00513R000516320015-8

89147
P/016/60/014/012/002/002
B103/B207

Chemical effect of ultrasonics

High pressures (several thousand atm) as well temperatures of between 2700 and 10000°C are found to exist in the neighborhood of the cavitation bubbles. Hitherto, the phenomenon of cavitation could not be completely clarified. It is assumed (Ref. 38) that the unification of several gas particles causes a cavitation nuclei from which the bubble develops. The gases dissolved in the liquid treated with sound as well as the suspended particles favor cavitation. Furthermore, the author discusses the interpretation of several researchers given to the formation of H_2O_2 and the oxidation of KI by ultrasonics. In carefully degased water, no chemical processes occur under treatment with sound. According to certain researchers, these processes require no oxygen, although also other views are represented in literature. Water, however, is indispensable for these processes. Substances with a high vapor tension (ether, acetone) as well as trytophane prevent the mentioned reactions. The author discusses the effect of the intensity of ultrasonic waves upon the mentioned processes and finds (Ref. 38) that the rate of oxidation is independent of the intensity in the range of cavitation. This holds in the field of the standing waves. Here, the effect of intensity results in an increase of the cavitation range until a maximum is reached at which this range

Card 2/5

APPROVED FOR RELEASE: 08/25/2000 CIA-RDP86-00513R000516320015-8"

"APPROVED FOR RELEASE: 08/25/2000 CIA-RDP86-00513R000516320015-8

89147
P/016/60/014/012/002/C02
B103/B207

Chemical effect of ultrasonics

comprises the entire field. Thid does not hold for the field of the traveling waves. Here, the range of cavitation is equal to the entire field of ultrasonics. The high velocity amplitudes hamper the formation of cavitation nuclei. To illustrate the effect of frequency upon the chemical processes, the following formula is given: $I = \frac{\varrho v}{2} (2\pi NA)^2$, where I is the intensity, ϱ the density of the medium, v the rate of propagation of the wave in the medium, N is the wave frequency, and A denotes the oscillation amplitude. Although the mentioned examples indicate that the frequency may influence the reactions in the medium treated with sound, this problem is by no means finally solved. Also the data provided by individual researchers concerning the effect of the concentration of solutions and the temperature, are not uniform. The author discusses furthermore the existing theories of the mechanism of the effect of cavitation, i.e.: a. the theory of heat, the theory of the electric discharges, and the action of H- and OH radicals. The theory of discharges, however, finds the greatest support. Finally, the author discusses the applicability of ultrasonics in practice. In spite of several experiments, the possibilities do at present not seem to be very promising. The useful effect of

Card 3/5

APPROVED FOR RELEASE: 08/25/2000 CIA-RDP86-00513R000516320015-8"

"APPROVED FOR RELEASE: 08/25/2000 CIA-RDP86-00513R000516320015-8

89147

P/016/60/014/012/002/002
B103/B207

Chemical effect of ultrasonics

the acoustic energy used is frequently very low (0.007% in the case of H_2O_2 formation). The future applicabilities are the following: 1) Ultrasonics causes the aging of some wines and liqueurs. A similar effect may also be applied in the perfume industry. 2) The chocolate mass is depolymerized and oxidized by ultrasound waves. Thus, the time of the production process is reduced to 50%. 3) Metals, especially when in powder form, are affected by water under the action of ultrasonics, which causes the escape of hydrogen at room temperature. It may be used for the reduction of natural compounds which are unstable to acids and high temperatures. 4) Ultrasonics accelerates the hydrolysis of valuable natural compounds which do not tolerate hydrolysis by acids or alkalies at higher temperatures. The author recommends further studies of ultrasonics. She mentions papers by I. G. Polotskiy (Ref. 5), A.V. Sokol'skaya and I. Ye. El'piner (Ref. 60), and thanks Anna Piotrowska, Magister, Head of the Pracownia Ultradźwiękowa (Laboratory of Ultrasonics), as well as Janina Świętosławska, Docent, Head of the Zakład Fizyki Technicznej (Department of Technical Physics), Instytut Chemii Ogólnej (Institute of General Chemistry) in Warsaw for support of her work and criticism. There are 10 figures, 2 tables, and 83 references: 15 Soviet-bloc and 39 non-Soviet-

Card 4/5

APPROVED FOR RELEASE: 08/25/2000 CIA-RDP86-00513R000516320015-8"

"APPROVED FOR RELEASE: 08/25/2000 CIA-RDP86-00513R000516320015-8

89147
P/016/60/014/012/002/002
B103/B207

Chemical effect of ultrasonics

bloc.

ASSOCIATION: Zakład Fizyki Technicznej Instytutu Chemii Ogólnej w Warszawie (Department of Technical Physics of the Institute of General Chemistry, Warsaw)

SUBMITTED: June 6, 1960

Card 5/5

APPROVED FOR RELEASE: 08/25/2000 CIA-RDP86-00513R000516320015-8"

"APPROVED FOR RELEASE: 08/25/2000 CIA-RDP86-00513R000516320015-8

GORSKA, Maria

A case of staphylococcal septicemia complicated by pneumatosis cystoides intestinalis. Pediat. pol. 38 no.2:207-212 '63.

1. Z II Kliniki Pediatrycznej AM w Lublinie Kierownik: doc. dr. med. A. Gebala.

(PNEUMATOSIS CYSTOIDES INTESTINALIS)
(STAPH INFECTIONS, GASTROINTESTINAL)
(SEPTICEMIA)

APPROVED FOR RELEASE: 08/25/2000 CIA-RDP86-00513R000516320015-8"

"APPROVED FOR RELEASE: 08/25/2000 CIA-RDP86-00513R000516320015-8

P/014/63/042/003/003/003
D204/D307

AUTHORS: Eysymontt, Janusz and Górska, Maria

TITLE: Emulsification of methylsilicone oils with the aid of an acoustic cogged generator

PERIODICAL: Przemysł Chemiczny, v. 42, no. 3, 1963, 167-172

TEXT: The present work is a development of studies carried out at the Instytut Tworzyw Sztucznych (Plastics Institute) on the emulsification of methylsilicone oils, and was aimed at developing a method for a semi-technical scale process, for methylsilicone oils of various viscosities, to form highly concentrated emulsions. The present authors used a so-called acoustic cogged generator patented by Engineer J. Tabin and J. Glowalla (Pol. pat. 40022 (1956)). Plan of the work embraced (1) determination of the minimum dose of emulsifier for a 33% emulsion, (2) attempts at emulsification of oils of viscosity higher than 200 centistokes, and at obtaining highly concentrated (e.g. 50 and 70%) emulsions. Most tests were carried out with commercial E. German methylsilicone oil OE4018/350, of viscosity

Card 1/3

APPROVED FOR RELEASE: 08/25/2000 CIA-RDP86-00513R000516320015-8"

"APPROVED FOR RELEASE: 08/25/2000 CIA-RDP86-00513R000516320015-8

P/014/63/042/003/003/003
D204/D307

Emulsification of ...

3.50 centistokes, with ~ 33-66% of the emulsion by weight, and 1-5% of emulsifier. The emulsions were examined by microphotography, and curves showing the numerical and volume distribution of particles were plotted. Characteristic values are tabulated. It was found that: emulsion quality depends little, if at all, on the number of passes through the generator; the degree of dispersion increases with the proportion of emulsifier; oils 146-910 centistokes in viscosity may be emulsified; 66% emulsion of OE 4018/350 was of equal quality to the 33% emulsion; the emulsion quality was similar to that of commercial E. German emulsions; emulsion stability was high; the resultant emulsions are suitable for hydrophobization of glasses and ceramics, spraying of molds in rubber and plastics technology, etc. The authors wish to thank Paweł Rościszewski, Director of the Pracownia Silikonów (Silicone Laboratory) of the Plastics Institute for his initiative, supply of test materials, and assistance in the evaluation of results.

ASSOCIATION: Pracownia Ultradźwiękowa Zakładu, Fizyki Technicznej Instytutu Chemii Ogólnej w Warszawie (Ultrasonics Laboratory of the Department of Technological Physics,

Card 2/3

APPROVED FOR RELEASE: 08/25/2000 CIA-RDP86-00513R000516320015-8"

"APPROVED FOR RELEASE: 08/25/2000 CIA-RDP86-00513R000516320015-8

Emulsification of ...

P/014/63/042/003/003/003
D204/D307

General Chemistry Institute in Warsaw)

SUBMITTED: July 27, 1962

Card 3/3

APPROVED FOR RELEASE: 08/25/2000 CIA-RDP86-00513R000516320015-8"

"APPROVED FOR RELEASE: 08/25/2000 CIA-RDP86-00513R000516320015-8

BIELAWSKA, Anna; GORSKA, Maria

Observations of the frost injuries during the winter 1955/56 in the Botanical Garden in Poznan. Biologia Poznan no.3:67-96 '61.

1. Botanical Garden, A. Mickiewicz University, Poznan.

APPROVED FOR RELEASE: 08/25/2000 CIA-RDP86-00513R000516320015-8"

"APPROVED FOR RELEASE: 08/25/2000 CIA-RDP86-00513R000516320015-8

MYSAKOWSKA, H.; KIEPECKI, M.; SMAGA, N.; GORSKA, S.; CYGAN, E.; SZAREWICZ, W.
SIKORA-ROZYNSKA, .; JARZYNA, J. (Lublin)

Cases of delay and neglect in the treatment of pulmonary tuberculosis among the rural population. Gruzlica 31 no.6:674-676 Je'63.

APPROVED FOR RELEASE: 08/25/2000 CIA-RDP86-00513R000516320015-8"

"APPROVED FOR RELEASE: 08/25/2000 CIA-RDP86-00513R000516320015-8

GORSKA, T.; JANKOWSKA, E.; KOZAK, W.

The effect of deafferentation on instrumental (type II) cleaning reflexes in cats. Acta biol exper 21:207-217 '61.

1. Department of Neurophysiology, Nencki Institute of Experimental Biology, Warsaw.

(CATS) (REFLEXES)

APPROVED FOR RELEASE: 08/25/2000 CIA-RDP86-00513R000516320015-8"

"APPROVED FOR RELEASE: 08/25/2000 CIA-RDP86-00513R000516320015-8

GORSKA, T.; JANKOWSKA, E.

The effect of deafferentation on instrumental (type II) conditioned reflexes in dogs. Acta biol exper 21:219-234 '61.

1. Department of Neurophysiology, Nencki Institute of Experimental Biology, Warsaw.

(DOGS) (REFLEXES)

APPROVED FOR RELEASE: 08/25/2000 CIA-RDP86-00513R000516320015-8"

"APPROVED FOR RELEASE: 08/25/2000 CIA-RDP86-00513R000516320015-8

GORSKA, T.; JANKOWSKA, E.

The effect of deafferentation on instrumental (type II) conditioned reflexes in dogs. Acta Biol.Exp 21:219-234 '61.

1. Department of Neurophysiology, Nemcki Institute of Experimental Biology, Warsaw.
(NERVOUS SYSTEM physiol) (REFLEX CONDITIONED)

APPROVED FOR RELEASE: 08/25/2000 CIA-RDP86-00513R000516320015-8"

"APPROVED FOR RELEASE: 08/25/2000 CIA-RDP86-00513R000516320015-8

GORSKA, T.; JANKOWSKA, E.; KOZAK, W.

The effect of deafferentation on instrumental (type II) cleaning reflex in cats. Acta Biol Exp 21:207-217 '61.

1. Department of Neurophysiology, Nencki Institute of Experimental Biology, Warsaw.
(REFLEX) (NERVOUS SYSTEM physiol)

APPROVED FOR RELEASE: 08/25/2000 CIA-RDP86-00513R000516320015-8"

"APPROVED FOR RELEASE: 08/25/2000 CIA-RDP86-00513R000516320015-8

GORSKA, Teresa, mgr.

The improvement of the raw material management in the cellulose and paper industries. Przegl papier 18 no.3:91-92 Mr '62.

1. Zjednoczenie Przemyslu Celulozowo-Papierniczego, Lodz.

APPROVED FOR RELEASE: 08/25/2000 CIA-RDP86-00513R000516320015-8"

"APPROVED FOR RELEASE: 08/25/2000 CIA-RDP86-00513R000516320015-8

GORSKA, Teresa, mgr.

Standards and control of consumption of fiber raw materials, fillers, and glues in the production of paper and cardboard. Przegl papier 20 no.8:265-270 Ag'64

1. Pulp and Paper Institute, Lodz.

APPROVED FOR RELEASE: 08/25/2000 CIA-RDP86-00513R000516320015-8"

"APPROVED FOR RELEASE: 08/25/2000 CIA-RDP86-00513R000516320015-8

GORSKI, Teresa, Mgr.

Studies on better methods of standardization and calculatory settlement of the consumption of fibrous raw materials, fillers, and size for the production of paper and board. Przegl papier 21 no.1:6-11 Ja '65.

1. Pulp and Paper Institute, Lodz. Submitted November 1964.

APPROVED FOR RELEASE: 08/25/2000 CIA-RDP86-00513R000516320015-8"

"APPROVED FOR RELEASE: 08/25/2000 CIA-RDP86-00513R000516320015-8

GORSKA, Zinajda; MADROSZKIEWICZ, Marian

Experimental introduction of catgut into the anterior chamber of the eye in rabbits. Klin. oczna 32 no.4:411-414 '62.

1. Z Kliniki Okulistycznej Slaskiej AM w Zabrzu. Kierownik: prof. dr med. M. Madroszkiewicz.

(EYE) (SUTURES)

APPROVED FOR RELEASE: 08/25/2000 CIA-RDP86-00513R000516320015-8"

"APPROVED FOR RELEASE: 08/25/2000 CIA-RDP86-00513R000516320015-8

GORSKA-BRYLASS, A.

Elaioplasts in the grains of Campanula pollen. Acta soc botan Pol 31 no.3:409-418 '62.

1. Katedra Anatomii i Cytologii Roslin, Uniwersytet, Lodz.

APPROVED FOR RELEASE: 08/25/2000 CIA-RDP86-00513R000516320015-8"

"APPROVED FOR RELEASE: 08/25/2000 CIA-RDP86-00513R000516320015-8

GORSKAYA, K.I.; KON'KOVA, A.I.

Developing a new design of shoulder drums without dismountable shoulder for 8.25-15 and 9.00-16 tire casing building at the Leningrad Tire Factory. Kauch.i rez. 21 no.2:42-43 F '62. (MIRA 15:2)

1. Leningradskiy shinnyy zavod.
(Leningrad--Tires, Rubber)

APPROVED FOR RELEASE: 08/25/2000 CIA-RDP86-00513R000516320015-8"

"APPROVED FOR RELEASE: 08/25/2000 CIA-RDP86-00513R000516320015-8

BELOVA, A.P.; GORSKAYA, L.G.; ZAKGEYM, L.N.

Electric properties of this oxide layers on aluminum, tantalum and zirconium. Fiz. tver. tela 3 no.6:1851-1858 Je '61. (MIRA 14:7)
(Metallic oxides--Electric properties)

APPROVED FOR RELEASE: 08/25/2000 CIA-RDP86-00513R000516320015-8"

"APPROVED FOR RELEASE: 08/25/2000 CIA-RDP86-00513R000516320015-8

GORSKAYA, Nina Svyatoslavna; SHLIONSKIY, Grigoriy Borisovich

[Vladimir and its environs; a concise guidebook] Vladimir i ego okrestnosti; kratkii putevoditel'. Vladimir, Vladimirskoe knizhnoe izd-vo, 1959. 165 p. (MIRA 14:4)
(Vladimir--Guidebooks)

APPROVED FOR RELEASE: 08/25/2000 CIA-RDP86-00513R000516320015-8"

"APPROVED FOR RELEASE: 08/25/2000 CIA-RDP86-00513R000516320015-8

MYSAKOWSKA, Helena; GORSKA, Stefania

Percentage of conservative and surgical treatment of tuberculosis in the Tuberculosis hospital of the Medical academy in Lublin in 1944-1954. Gruzlica 24 no.2:113-118 Feb 56.

1. Z Kliniki Ftyzjatrycznej A.M. w Lublinie. Kierownik: doc. dr. H. Mysakowska, Lublin, ul. Dr. Biernackiego 5, Klinika Ftyzatr. A.M.

(TUBERCULOSIS, PULMONARY, ther.
statist. in Poland.

APPROVED FOR RELEASE: 08/25/2000 CIA-RDP86-00513R000516320015-8"

"APPROVED FOR RELEASE: 08/25/2000 CIA-RDP86-00513R000516320015-8

GORSKAYA, S.V.; SEVERIN, V.A.

Effect of carbon sources on the biosynthesis of streptomycin. Antibiotiki 6 no.3:210-215 Mr '61. (MIRA 14:5)

1. Vsesoyuznyy nauchno-issledovatel'skiy institut antibiotikov.
(STREPTOMYCIN) (ACTINOMYCES)
(CARBOHYDRATE METABOLISM)

APPROVED FOR RELEASE: 08/25/2000 CIA-RDP86-00513R000516320015-8"

"APPROVED FOR RELEASE: 08/25/2000 CIA-RDP86-00513R000516320015-8

SEVERINA, V.A.; GORSKAYA, S.V.; GRACHEVA, I.V.

Role of amides in streptomycin biosynthesis. Dokl. AN SSSR 139 no.3:736-739 Jl '61. (MIRA 14:7)

1. Vsesoyuznyy nauchno-issledovatel'skiy institut antibiotikov. Predstavleno akademikom A.I. Oparinym.
(STREPTOMYCIN) (ASPARAGINE) (GLUTAMINE)

APPROVED FOR RELEASE: 08/25/2000 CIA-RDP86-00513R000516320015-8"

"APPROVED FOR RELEASE: 08/25/2000 CIA-RDP86-00513R000516320015-8

GORSKAYA, S. V.

Dissertation defended at the Institute of Microbiology for the academic degree of Candidate of Biological Sciences:

"Physiological Properties and Characteristics of the Metabolism of Act. streptomicini (LS-1 Strain) When Cultivated in a Synthetic Media."

Vestnik Akad Nauk, No. 4, 1963, pp. 119-145

APPROVED FOR RELEASE: 08/25/2000 CIA-RDP86-00513R000516320015-8"

"APPROVED FOR RELEASE: 08/25/2000 CIA-RDP86-00513R000516320015-8

GORSKA, T.; GLISZCZYNSKA, X.

For better exploitation of suburban lines. p. 81

Remarks on work methods of the Psychotechnical Clinic in Warsaw. p.109
PRZEGLAD KOLEJOWY (Wydawntctwa Komunikacyjne) Warszawa. Vol. 7, no.3, Mar. 1955

SOURCE: East European Accessions List, (EEAL), Library of Congress, Vol. 4, no. 12, December 1955

APPROVED FOR RELEASE: 08/25/2000 CIA-RDP86-00513R000516320015-8"

"APPROVED FOR RELEASE: 08/25/2000 CIA-RDP86-00513R000516320015-8

Restriction of animal protein in the [illegible]

APPROVED FOR RELEASE: 08/25/2000 CIA-RDP86-00513R000516320015-8"

"APPROVED FOR RELEASE: 08/25/2000 CIA-RDP86-00513R000516320015-8

P. S. ARUP.

APPROVED FOR RELEASE: 08/25/2000 CIA-RDP86-00513R000516320015-8"

"APPROVED FOR RELEASE: 08/25/2000 CIA-RDP86-00513R000516320015-8

T. GORSKA T. WITWICKI and GLISZCZYNSKA's

Z zagadnien psychologii pracy w swietle wyzszej czynnosci nerwowej (From the Problems of Industrial Psychology in the Light of Higher Nervous Activities); a book review. P. 31.

OCHRONA PRACY. (Centralna Rada Zwiazkow Zawodowych i Centralny Instytut Ochrony Pracy). Warszawa, Poland. Vol. 13, No. 9, Sept. 1958.

Monthly List of European Accessions (EEAI) LC, Vol. 8, No. 8 August 1959

Uncl.

APPROVED FOR RELEASE: 08/25/2000 CIA-RDP86-00513R000516320015-8"

"APPROVED FOR RELEASE: 08/25/2000 CIA-RDP86-00513R000516320015-8

GORSKA, TA.; JANKOWSKA, E.

Effect of deafferentation of the extremity on motor conditioned reflexes in dogs. Acta physiol.polon. 11 no.5/6:709-710 '60.

L. Z Zakladu Neurofizjologii Instytutu Biol.Dosw. im. M.Nenckiego. Kierownik: prof.dr J.Konorski.
(REFLEX CONDITIONED)

APPROVED FOR RELEASE: 08/25/2000 CIA-RDP86-00513R000516320015-8"

"APPROVED FOR RELEASE: 08/25/2000 CIA-RDP86-00513R000516320015-8

JANKOWSKA, E.; GORSKA, T.

The problem of replacement of motor conditioned reactions by the contra-lateral extremity after unilateral injury of the brain. Acta physiol.polon. 11 no.5/6:737-738 '60.

1. Z Zakladu Neurofizjologii Instytutu Biologii Doswiadczalnej im. M.Nenckiego, Kierownik: prof. J.Konorski.
(BRAIN physiol)
(REFLEX CONDITIONED)

APPROVED FOR RELEASE: 08/25/2000 CIA-RDP86-00513R000516320015-8"